SIERRA®

InnovaMass® 240i/241i

VOLUMETRIC & MULTIVARIABLE MASS VORTEX FLOW METERS

Multivariable Readout: Volumetric flow, mass flow, density, temperature, pressure, totalizer and alarms

Pushbutton display menu control for Dial-A-Fluid™, Dial-A-Pipe™, Meter Tune™ alarms, totalizer, and diagnostics

Inside Housing: Improved sensor drive circuit, digital signal processing, firmware running Raptor II™ Operating System with comprehensive fluid property algorithm set

All-welded construction for heavy industry, no moving parts, SCH 80 pipe

Electrical and communications access port (both sides)

Explosion proof glass and enclosure

Available in many flange configurations: 1 inch to 8 inch pipes (DN 25 to DN 200)

Tough, rugged, reliable sensors inside flow body

240i
Inline

InnovaMass® Reinvented.

In the 1990s, Sierra designed and introduced InnovaMass, the first multivariable mass vortex flow meter in the world. Through a single process connection, InnovaMass empowered customers with mass flow rate, volumetric flow rate, density, temperature and pressure. Five instruments in one.

InnovaMass' innovative new features introduced a welcome force-multiplier. With five high accuracy measurements available from a single device, total cost-of-ownership plummeted. Lower initial cost, less complex installation, and reduced maintenance costs contributed to significant customer savings.

Today, with the latest hyper-fast microprocessors, robust software applications, and our new automated state-of-the-art flow calibration facility, the completely redesigned InnovaMass 240i/241i iSeries delivers precision, performance, and application flexibility never before possible.

The Vortex iSeries Introduces Comprehensive Flow Energy Management

There are many forms of energy contained in flow, whether it is the heat energy (BTU or joules) in steam or water, the potential combustive energy in natural gas, or the potential expansion energy in compressed air. The flow of this energy in the form of steam, compressed air, natural gas, and water must be measured and managed to minimize energy losses. The iSeries delivers greater measurement precision than ever before, which allows for the most precise management of "flow energy." All forms of energy loss have a cost and reducing these costs drives increased productivity and competitiveness.

The reinvented InnovaMass 240i and 241i delivers a revolution in flow energy management by maximizing measurement precision and realizes this goal with the following new iSeries features:

- Flow Energy Calculations: AGA8 natural gas, steam enthalpy, thermal energy/BTU
- Raptor II OS microprocessor is 10x faster to run robust software apps
- Field diagnostics, validation, and adjustment through onboard Smart Interface Portal
- Rapid update of latest features with field firmware upgrade capability
- FloPro™ software application improves point-velocity accuracy for insertion version
- Complete suite of digital communications for turnkey networking & automation
- Patented MassBalance™ sensor in tandem with Raptor II for mechanical and digital signal processing breakthroughs

240i Inline
241i Insertion

- Mass or volumetric flow monitoring of gases, liquids and steam
- Measures five process variables with one process connection: mass flow, volumetric flow, density, pressure, temperature
- Flow Energy Calculations: AGA8 natural gas, steam enthalpy, thermal energy/BTU
- Insertion version for 2 inch (50.8 mm) or greater; inline to 8 inches (DN 200)
- Accuracy of up to 0.7% of reading; temperature to 392°F (200°C); pressure to 1500 psig (103 barg)
- Raptor II™ OS flow engine program builds and measures complex liquid and gas mixtures
- Raptor II OS and MassBalance technology extends range down to Reynolds numbers well below 5000
- Smart Interface Portal (SIP) assures field validation and allows for easy configuration
- Datalogging capability
- Dial-A-Pipe™: Change pipe size in the field
- Dial-A-Fluid™: Change fluid in the field
- Three configurable 4-20 mA outputs
- Multiple languages
- HART, Modbus, Profibus DP, Foundation Fieldbus, USB, RS-232
- Approvals: CE, cFMus, ATEX, PED, IECEx

The Flow Engine Behind It All

Originally developed as the operating system for our QuadraTherm thermal mass flow meter, Raptor II OS is the "flow-engine" programming inside every InnovaMass iSeries vortex meter. Raptor II uses advanced digital signal processing and proprietary mathematical algorithms to enhance the flow signal, while also calculating the thermodynamic properties of the gas, liquid or steam being measured in real-time.

Raptor II OS accomplishes the following:

- Easily manages all five process variables in real time
- Offers apps like FloPro™, Dial-A-Pipe™, Dial-A-Fluid™, ValidCal™ Diagnostics, and Meter Tuning™
- Allows for field firmware upgrades
- Enables creation of unique fluid mixtures with qMix
- Enhances velocity signal for greater sensitivity at low flows
- Interfaces with the Smart Interface Portal software to read and adjust the meter in the field
- Includes a fluid database with nearly all liquids, gases, and complete steam tables

Interface Portal Assures Quality, Saves Time and Money

Sierra's Smart Interface Portal™ (SIP) is an innovative suite of diagnostics, field validation, meter setup and adjustment tools (Figure A1). ValidCal™ Diagnostics automatically checks the meter's firmware and hardware and allows faults to be reported to the factory for immediate repair (Figure A2). All data transferred is securely encrypted. InnovaMass firmware is field upgradable, so the meter can be updated or repaired in-situ, saving time and money.

The Meter Tuning™ tool adjusts inputs and outputs making it easy to tune the meter in difficult applications (Figure A3).

Figure A1. Home Screen

Figure A2. ValidCal Diagnostics

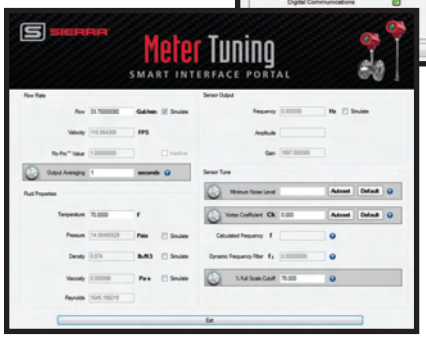

Figure A3. Meter Tuning

The Flexibility of Insertion Vortex

The 241i insertion vortex meter is an economical solution for applications from 2-inch (50.8 mm) pipes to 72 inches (1.8M) in diameter and larger. Volumetric or multivariable measurement is possible with a single pipe insertion point, greatly reducing installation costs (Figure B). The 241i can be hot tapped into applications with an optional probe retractor (shown in Figure D). More compact probe lengths are available based on application requirements.

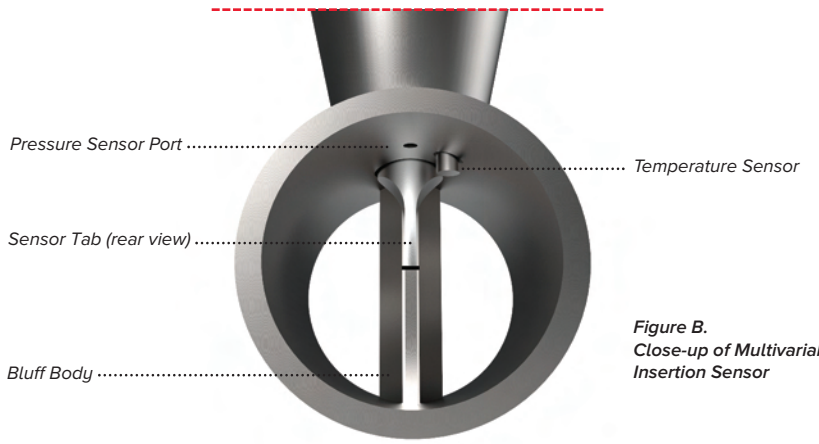

Figure B.
Close-up of Multivariable Insertion Sensor

Raptor II OS Enhances Accuracy with FloPro™

Driven by Raptor II OS, the 241i insertion has a vastly improved flow profile calculation using a proprietary application called FloPro. With all insertion point velocity flow meters, knowing the flow profile inside the pipe or duct is key to stable and reliable accuracy. Traditional insertion meters use a simple formula from Miller's Handbook that calculates flow profile assuming the flow is always turbulent.

FloPro makes no assumptions. It applies a sophisticated mathematical algorithm for higher resolution and understanding of flow profile. In addition to turbulent flow, FloPro calculates laminar and transitional flow in real-time as they would occur inside the pipe or duct (See Figure C). FloPro improves upon previous methods by providing a much more accurate calculation of the flow profile in the transitional flow regime that occurs between laminar flow and turbulent flow. This results in increased accuracy, particularly at low flow rates with a Reynolds Number in the range of 2,000 to 4,000.

Figure C.
Ratio of Laminar, Transitional and Turbulent flow regimes and Reynolds number
(Source: Richard Miller, Flow Measurement Engineering Handbook.)

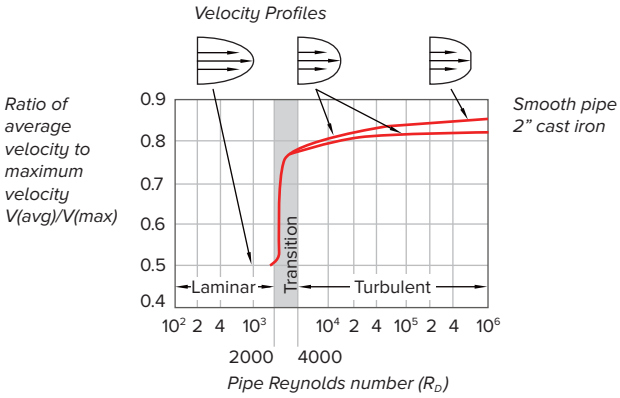

Figure D.
241i with Probe Retractor

World-Class Flow Calibration Facility

Every flow meter is only as good as its calibration. Each InnovaMass is calibrated by Sierra's new calibration facility in Monterey, California, to assure the highest level of quality. Flow standards with accuracies better than 0.2% of reading are used to assure the highest accuracy possible.

All calibrations follow the guidelines of ISO 17025 and are directly traceable to national standards such as NIST (United States National Institute of Standards and Technology).

Inspired by Formula One Racing

In 2014, Sierra's Automotive Test Division (sierra-cp.com) completed a state-of-the-art F1 engine testing facility for Honda. Sierra's CADET test automation software was installed to manage all aspects of engine testing.

Sierra's flow division immediately saw the potential to deliver this same level of excellence to InnovaMass calibration. Today, the same CADET software that tunes those F1 engines now runs pumps, reads calibration standards, performs high-speed data acquisition and performance analysis, and even sounds alarms if anything goes wrong. Every unit we calibrate adds data to Sierra's database for continuous calibration process improvement.

Manage Your Flow Energy Costs Downward

1) Liquid Oil and Fuel Flow Energy

- Measure custody transfer of diesel, fuel oils, and heat transfer oils
- Measure both flow and heat energy/BTU in heat exchangers
- Mass flow measurement reduces installation costs
- Half the pressure drop of an orifice or turbine meter reduces operating costs

2) Combustible Gas Flow Energy

- Measure custody transfer of natural gas, landfill gas, and digester gas
- Measure flow and heat energy/BTU content in natural pressure gases
- Monitor combustion fuel flow for high efficiency combustion
- Fast response to changes in flow rate for safer operation

3) Compressed Air Usage Flow Energy

- Measure both low and high pressure air used in blowdown or pneumatic control systems
- Monitor combustion air flow for high efficiency combustion
- Monitor compressor efficiency and reduce operating costs

4) Hot Water Flow Energy

- Measure hot water, makeup water, and blowdown water
- Measure the enthalpy and energy/BTU content
- Determine boiler efficiency
- Monitor boiler blowdown to reduce maintenance and chemistry costs

5) Steam Header Flow Energy

- Measure saturated or superheated steam mass flow rate, temperature and pressure (from one instrument)
- Measure steam enthalpy and BTU/energy content
- Measure custody transfer of steam
- Alarms for a rapid decline in pressure, or high pressure states that indicate emergency situations and improves safety

6) Chill Water Flow Energy

- Measure enthalpy and BTU/energy content of cold water
- Calculate custody transfer of heat energy in heating/cooling systems
- Monitor HVAC efficiency and reduce operating costs

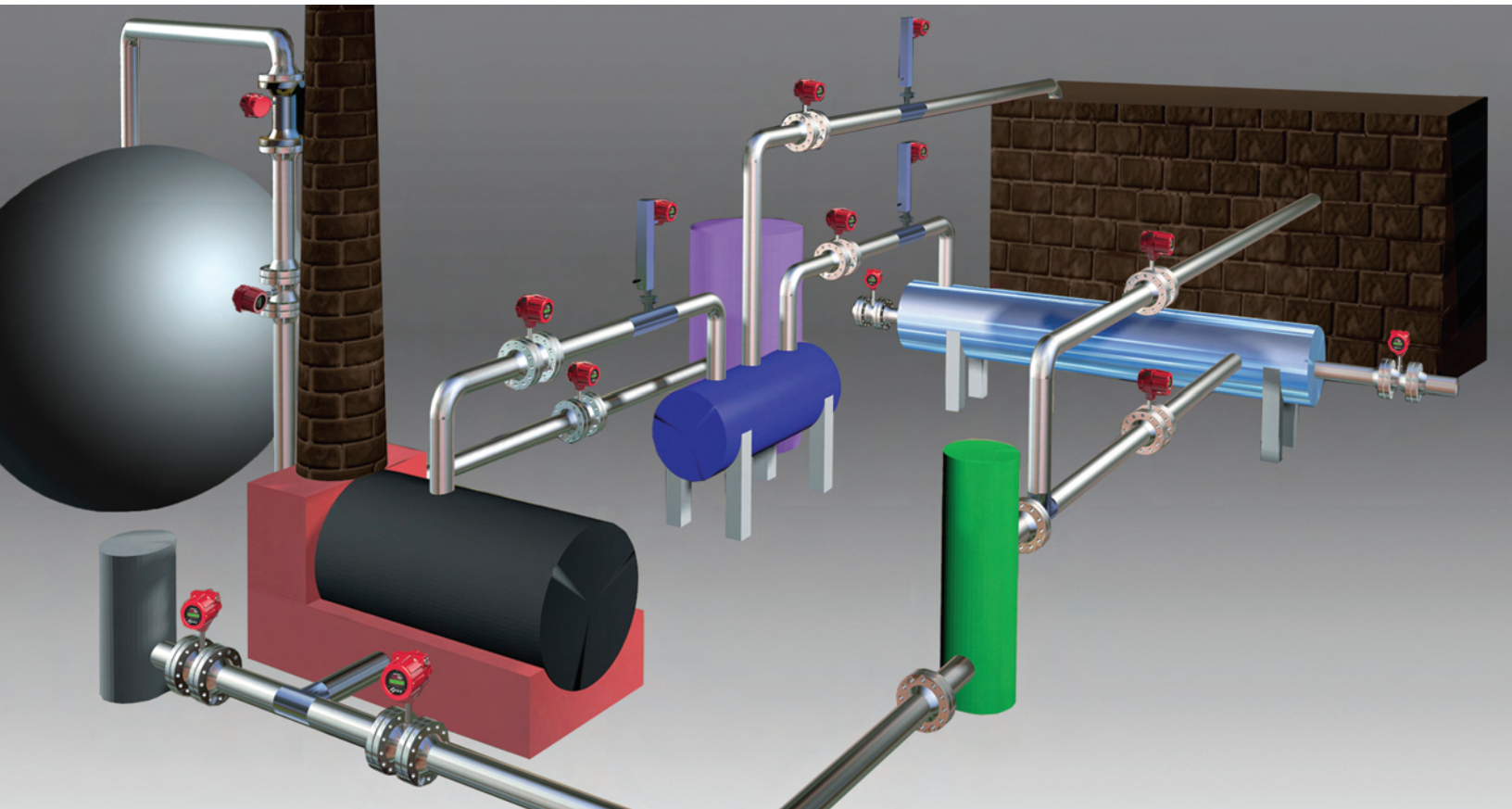

PERFORMANCE SPECIFICATIONS

Fluid Measured
Mass or volumetric flow measurement of any gas, liquid, or steam
Dial-A-Fluid feature to change fluid in the field
Fluid Database to build complex fluid mixtures with qMix software

Multivariable Outputs
Measure five process variables with one process connection:
Mass flow rate, volumetric flow rate, density, pressure, and temperature
Totalized flow based on user-determined flow units, sixteen full digits

Accuracy

Process Variables	240i Inline Meters		241i Insertion(1) Meters	
	Liquids	Gas and Steam	Liquids	Gas and Steam
Mass Flow Rate	+/- 1.0% of reading over a 30:1 range(3)	+/- 1.5% of reading(2) over a 30:1 range(3)	+/- 1.2% of reading over a 30:1 range(3)	+/- 2.0% of reading(2) over a 30:1 range(3)
Volumetric Flow Rate	+/- 0.7% of reading over a 30:1 range(3)	+/- 1.0% of reading over a 30:1 range(3)	+/- 1.0% of reading over a 30:1 range(3)	+/- 1.5% of reading over a 30:1 range(3)
Temperature	+/- 2°F (+/- 1°C)	+/- 2°F (+/- 1°C)	+/- 2°F (+/- 1°C)	+/- 2°F (+/- 1°C)
Pressure	0.5% of transducer full scale	0.5% of transducer full scale	0.5% of transducer full scale	0.5% of transducer full scale
Density	0.3% of reading	1.0% of reading(2)	0.3% of reading	1.0% of reading(2)

Notes: (1) Accuracies stated are for the total mass flow through the pipe.
(2) Over 50% to 100% of the pressure transducer's full scale.
(3) Nominal rangeability is stated. Precise rangeability depends on fluid and pipe size.

Repeatability
Mass Flow Rate: +/- 0.2% of reading
Volumetric Flow Rate: +/- 0.1% of reading
Temperature: +/- 0.2°F (+/- 0.1°C)
Pressure: +/- 0.05% of full scale
Density: +/- 0.1 % of reading

Stability Over 12 Months
Mass Flow Rate: +/- 0.2% of reading maximum
Volumetric Flow Rate negligible error
Temperature: +/ - 1.0°F (+/- 0.5°C) maximum
Pressure: +/ - 0.1% of full scale maximum
Density: +/ - 0.1% of reading maximum

Differential Pressure Requirements, P
Permanent pressure loss of inline meters for air at 68°F (20°C) and 14.70 psi (1.104 bara). See Figure 1. Permanent pressure loss of inline meters for water at 68°F (20°C). See Figure 2.

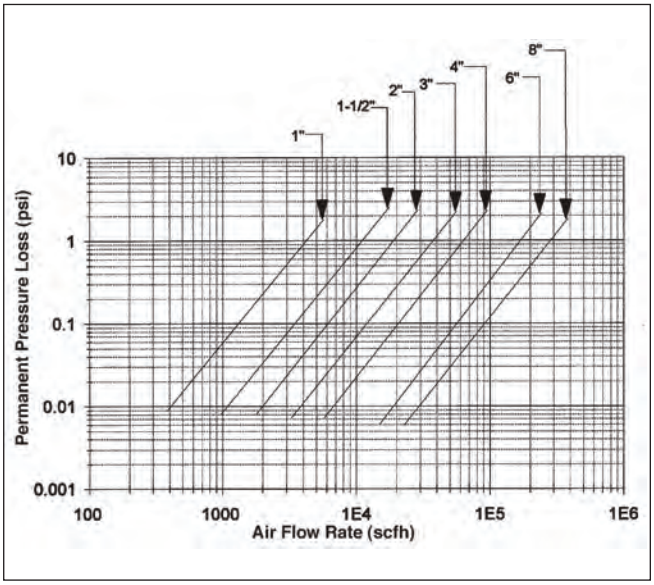

Figure 1

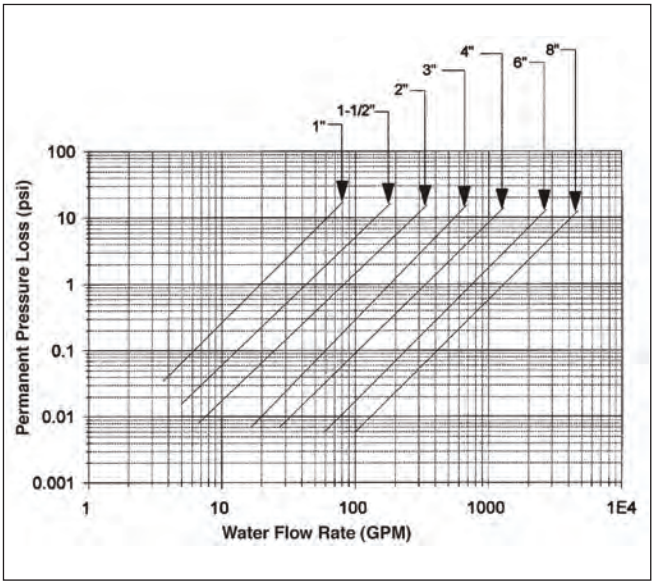

Figure 2

PERFORMANCE SPECIFICATIONS (continued)

Material Compatibility

240i: Any gas, liquid or steam compatible with 316L stainless steel. Not recommended for multi-phase fluids.

241i: Any gas, liquid or steam compatible with 316L stainless steel. Not recommended for multi-phase fluids.

Note: Units with the pressure option use Viton® elastomers.

Linear Range

Smart electronics corrects for lower flow, down to a Reynolds number of 2,000. The Reynolds number is calculated using the fluid's actual temperature and pressure monitored by the meter. Rangeability depends on the fluid, process connections and pipe size (consult factory with your application). Velocity rangeability under ideal conditions is as follows:

Liquids 30:1

Minimum Velocity

1 foot per second
(0.3 meters per second)

Maximum Velocity

30 feet per second
(9.14 meters per second)

Gases 30:1

Minimum Velocity

$$\sqrt{\frac{25}{\rho}} \text{ ft/s} \quad \rho \text{ in lb}_m/\text{ft}^3$$

$$\sqrt{\frac{37}{\rho}} \text{ m/s} \quad \rho \text{ in kg}/_m3$$

where ρ = fluid density

Maximum Velocity

91 m/s velocity
300 ft/s velocity

OPERATING SPECIFICATIONS

Flow Rates

Typical mass flow ranges are given in the following table. Precise flow ranges depend on the fluid and pipe size. 241i insertion meters are applicable to pipe sizes from 2 inches (DN50) and greater. Consult factory for sizing program: www.sierrainstruments.com/products/innovamass_sizing.html

Water Minimum and Maximum Flow Rates (gpm)								
Unit		1-inch	1.5-inch	2-inch	3-inch	4-inch	6-inch	8-inch
gpm	Min	2.3	5.5	9.2	21	36	81	143
	Max	68	165	276	618	1080	2440	4280

Water Minimum and Maximum Flow Rates (m^3/hr)								
Unit		DN25	DN40	DN50	DN80	DN100	DN150	DN200
m3/hr	Min	0.5	1.3	2.1	4.7	8.2	18	32
	Max	15	38	63	140	245	553	971

Air Minimum and Maximum Flow Rates (scfm)(1)								
Pressure		1-inch	1.5-inch	2-inch	3-inch	4-inch	6-inch	8-inch
0 psig	Min	5.52	13.5	22.5	50.4	87.8	199	349
	Max	90.5	221	369	826	1440	3260	5720
100 psig	Min	15.1	36.9	61.8	138	241	545	956
	Max	694	1690	2830	6330	11000	25000	43800
200 psig	Min	20.7	50.4	84.3	188	329	743	1300
	Max	1300	3170	5300	11800	20600	46700	81900
300 psig	Min	25	61	102	228	397	899	1580
	Max	1900	4640	7760	17300	30200	68400	120000
400 psig	Min	28.6	69.9	117	261	456	1030	1810
	Max	2500	6110	10200	22800	39800	90100	158000
500 psig	Min	31.9	77.8	130	291	507	1150	2010
	Max	3110	7580	12700	28300	49400	112000	196000

Note: (1) Standard conditions are 70° F and 1 atmosphere (21.1°C and 760 Torr).

Air Minimum and Maximum Flow Rates (nm^3/hr)(1)								
Pressure		DN25	DN40	DN50	DN80	DN100	DN150	DN200
0 barg	Min	9.35	22.8	38.2	85.3	149	337	591
	Max	154	375	628	1400	2450	5530	9710
5 barg	Min	22.8	55.6	92.9	208	362	819	1440
	Max	912	2230	3730	8330	14500	32800	57600
10 barg	Min	28.2	68.7	115	257	448	1010	1780
	Max	1530	3750	6270	14000	24400	55200	96900
20 barg	Min	42.5	104	173	387	676	1530	2680
	Max	3190	7780	13000	29100	50700	115000	201000
30 barg	Min	51.5	126	210	470	820	1850	3250
	Max	4710	11500	19200	42900	74900	169000	297000
40 barg	Min	59.2	145	242	540	942	2130	3740
	Max	6220	15200	25400	56800	99000	224000	393000

Note: (1) Normal conditions are 32°F and 1 atmosphere (0°C and 760 Torr).

OPERATING SPECIFICATIONS (continued)

Saturated Steam Minimum and Maximum Flow Rates (lb/hr)								
Pressure		1-inch	1.5-inch	2-inch	3-inch	4-inch	6-inch	8-inch
5 psig	Min	20	48.9	81.8	183	319	721	1270
	Max	266	650	1090	2430	4240	9590	16800
100 psig	Min	45.9	112	187	418	730	1650	2900
	Max	1390	3400	5690	12700	22200	50200	88100
200 psig	Min	61.9	151	253	565	985	2230	3910
	Max	2540	6200	10400	23200	40400	91400	160000
300 psig	Min	74.6	182	304	680	1190	2680	4710
	Max	3690	9000	15100	33600	58700	133000	233000
400 psig	Min	85.5	209	349	780	1360	3080	5400
	Max	4840	11800	19800	44200	77100	174000	306000
500 psig	Min	95.3	233	389	870	1520	3430	6020
	Max	6020	14700	24600	55000	95900	217000	381000

Saturated Steam Minimum and Maximum Flow Rates (kg/hr)								
Pressure		DN25	DN40	DN50	DN80	DN100	DN150	DN200
0.5 barg	Min	11	26.8	44.8	100	175	395	693
	Max	134	326	546	1220	2130	4810	8440
5 barg	Min	18.2	44.5	74.4	166	290	656	1150
	Max	488	1190	1990	4450	7770	17600	30800
10 barg	Min	24.3	59.3	99.2	222	387	874	1530
	Max	867	2120	3540	7910	13800	31200	54800
20 barg	Min	33.2	81.1	136	303	528	1200	2100
	Max	1620	3960	6620	14800	25800	58300	102000
30 barg	Min	40.3	98.3	164	368	641	1450	2540
	Max	2380	5820	9740	21800	37900	85800	151000
40 barg	Min	46.4	113	190	424	739	1670	2930
	Max	3170	7740	12900	28900	50400	114000	200000

OPERATING SPECIFICATIONS (continued)

Process Fluid Pressure

241i Insertion Pressure Ratings				
Probe Seal	Process Connection	Material	Rating	Ordering Code
Compression Fitting	2-inch male NPT	316L SS	1500 psig (103 barg)	CM
	2-inch 150 lb flange	316L SS	ANSI 150 lb	CF
	2-inch 300 lb flange	316L SS	ANSI 300 lb	CG
	2-inch 600 lb flange	316L SS	ANSI 600 lb	CH
	DN50/PN16 flange	316L SS	PN16	CFD
	DN50/PN40 flange	316L SS	PN40	CGD
	DN50/PN64 flange	316L SS	PN64	CHD
Packing Gland	2-inch male NPT	316L SS	500 psig (34.5 barg)	PM
	2-inch 150 lb flange	316L SS	ANSI 150 lb	PF
	2-inch 300 lb flange	316L SS	ANSI 300 lb	PG
	2-inch 600 lb flange	316L SS	ANSI 600 lb	PH
	DN50/PN16 flange	316L SS	PN16	PFD
	DN50 PN40 flange	316L SS	PN40	PGD
	DN50 PN64 flange	316L SS	PN64	PHD

Process Fluid Pressure

240i Inline Pressure Ratings		
Process Connection	Material	Rating
Flanged	316L SS	150, 300, 600 lb
DN Flanged	316L SS	PN16, PN40, PN64

Pressure Transducer Ranges

Pressure Sensor Ranges(1) psia (bara) Full Scale Operating Pressure (FS)	
psia	(bara)
15 to 30 [FS 30]	1.0 to 2.1 [FS 2.1]
30 to 100 [FS 100]	2.1 to 6.9 [FS 6.9]
100 to 300 [FS 300]	6.9 to 20.7 [FS 20.7]
300 to 500 [FS 500]	20.7 to 34.5 [FS 34.5]

Note: (1) To maximize accuracy, specify the lowest full scale operating pressure range for the application. To avoid damage, the flow meter must never be subjected to "Full Scale Operating Pressure" shown above.

Process Fluid & Ambient Temperature

Standard Temperature Sensor: -40°F to 392°F (-40°C to 200°C)

Ambient Operating:

NAA/cFMus: -40°F to 140°F (-40°C to 60°C)
ATEX/IECEx: -4°F to 140°F (-20°C to 60°C)
Storage: -40°F to 150°F (-40°C to 65°C)
0-98% relative humidity, non-condensing conditions

PHYSICAL SPECIFICATIONS

Wetted Materials

240i: 316L stainless steel standard
Viton® O-ring used on pressure transducer

241i: 316L stainless steel standard
Viton® packing gland
Other packing gland materials available upon request
Viton® O-ring used on pressure transducer

Enclosure

NEMA 4x (IP66) cast enclosure

Electrical Ports

Two 3/4-inch female NPT conduit ports

Mounting Connections

240i: 150, 300, 600 lb ANSI flange; PN16, 40, 64 DN flanges

241i: Permanent Installation
Two-inch male NPT; 150, 300, 600 lb ANSI flange (PN16, 40, 64 DN flanges) with compression fitting probe seal

Hot Tap Installation:

Two-inch male NPT; 150, 300, 600 lb ANSI flange (PN16, 40, 64 DN flanges); and optional retractor with packing gland probe seal, removable under line pressure.

Mounting Position

240i: No effect

241i: Meter must be perpendicular within +/- 5° of the pipe centerline

PHYSICAL SPECIFICATIONS (continued)

Approvals
cFMus Approval
ATEX Approval
IECEx Approval
CE Approval

Optional Certifications
Construction and inspection (ANSI/ASME B31.3)
Materials (NACE MR-01-75(90)

Alarms(1)
Solid-state relay for high, low or window alarms
Contact SPST / optical relay

POWER REQUIREMENTS

24 VDC +/-10%, 0.4 amp maximum
100 to 240 VAC, 50/60 Hz, 0.2 amps RMS at 12 W maximum

ANALOG AND DIGITAL OUTPUTS

Output Signals
Analog
Three field rangeable, simultaneous linear 4-20 mA output signals (500 ohms maximum loop resistance) for mass or volumetric flow rate, temperature, and pressure.

Pulse(1)
Relay capable of 1 Hz maximum user-definable pulse output for totalized flow

Note: (1) The pulse and alarm outputs are optically isolated and require external power for operation.

Digital Communications
HART, Modbus, RS-232, USB, Profibus DP and Foundation Fieldbus

USER INTERFACE & SOFTWARE

Smart Interface Portal (SIP)
User-centered software program allows for easy configuration and field validation. Includes:

Meter Tune: Adjusts inputs and outputs to adjust to application
ValidCal Diagnostics: Automatically diagnoses firmware and hardware and reports faults

User Interface
Local, keypad with six-button interface
Exit ⊗, and Enter ↵, with four-way directional arrows
RS-232 with PC software for communication and programming

Display
Ultra-bright, backlit, LCD digital display, 2 x 32 scrolling

Multi-Language
Supports English, Spanish, German and Mandarin; user can also add languages

Field Adjustments
Change between engineering units, fluid, pipe size, language

SIZING PROGRAM

Easy, web-based sizing program to input application details and generate correct meter specification. The sizing program is also available through the Smart Interface Portal if an internet connection is not available.

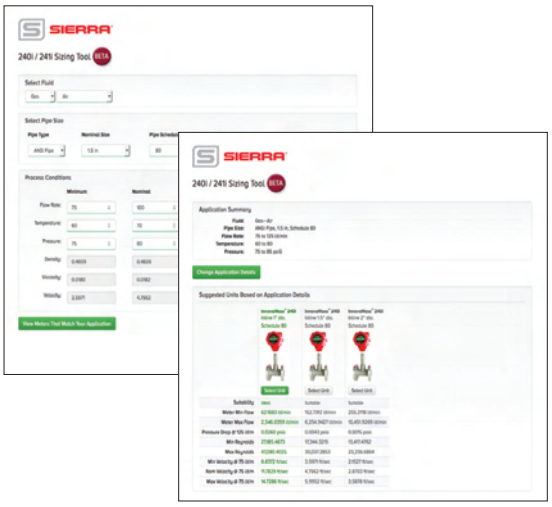

Visit www.sierrainstruments.com/products/innovamass_sizing.html for more information on the sizing program.

CALIBRATION

High-Performance Calibration Facility
High-accuracy flow calibration, used according to ASME standards.

Max Flow:	143m3/h (.5in – 4in capabilities)
Pressure:	Ambient
Temperature:	Ambient
Liquid:	Water
Uncertainty:	0.2% of the measured reading 0.1% repeatability
Control:	Cadet V14 Test Automation Software
Data Collection:	High speed data acquisition hardware and software
Calibration Interval:	Annual (verified daily)

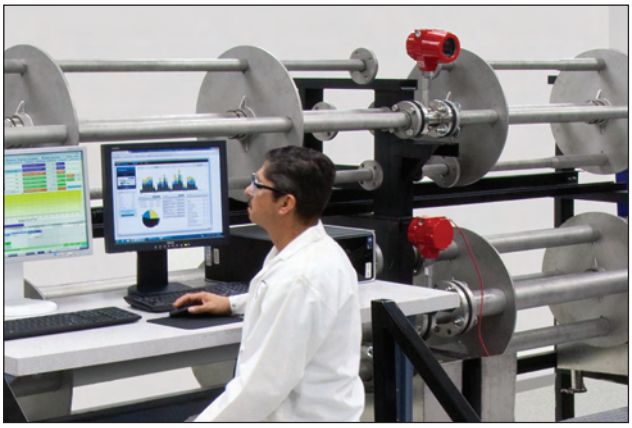

240i INLINE DIMENSIONAL DRAWINGS

240i Flanged Inline—Front

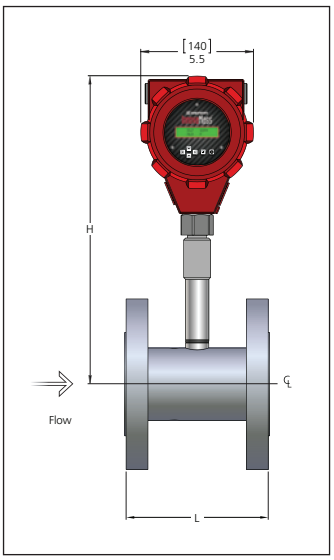

240i Flanged Inline—Side (Outlet View)

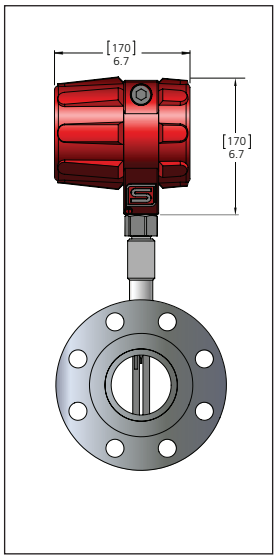

240i Remote Inline Junction Box—Front

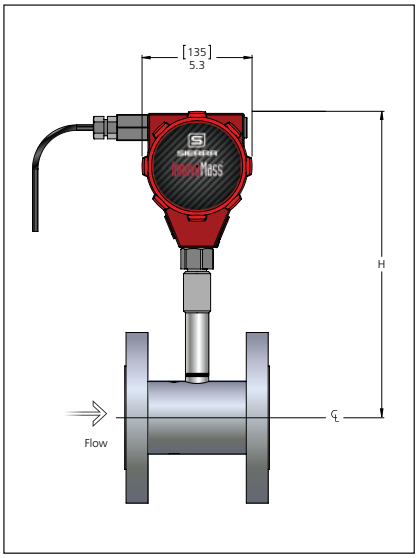

240i Remote Inline Junction Box—Side (Outlet View)

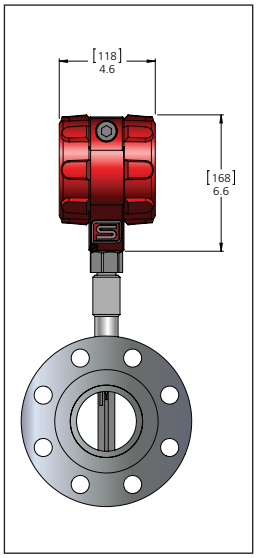

Note: All dimensions are inches (+/- .25-inch significant value). Millimeters are in parentheses. Certified drawings are available on request.

240i Inline Flange Sizes SCH 80 Pipe, 150, 300 Flanges		
Flow Body Size	L	H
1-inch	5.00 (127)	15.0 (381)
1.5-inch	5.50 (140)	15.1 (384)
2-inch	6.00 (152)	15.3 (389)
3-inch	7.00 (178)	15.8 (401)
4-inch	8.00 (203)	16.2 (411)
6-inch	9.00 (229)	17.3 (439)
8-inch	10.50 (267)	18.2 (462)

Note: All dimensions are inches (+/- .25-inch significant value). Millimeters are in parentheses. Certified drawings are available on request. 600 lb and PN64 meters have different L dimensions. Please contact Sierra for dimensions.

240i Inline Flange Sizes PN16, 40		
Flow Body Size	L	H
DN25	5.00 (127)	15.0 (381)
DN40	5.50 (140)	15.1 (384)
DN50	6.00 (152)	15.3 (389)
DN80	7.00 (178)	15.8 (401)
DN100	8.00 (203)	16.2 (411)
DN150	9.00 (229)	17.3 (439)
DN200	10.50 (267)	18.2 (462)

Note: All dimensions are inches (+/- .25-inch significant value). Millimeters are in parentheses. Certified drawings are available on request. 600 lb and PN64 meters have different L dimensions. Please contact Sierra for dimensions.

241i INSERTION SIZE OPTIONS

241i Variable Probe Dimensions			
241i Probe Type	Ordering Code	Meter Length (A)	Probe Length (B)
Standard Probe	LS	41.5 (1054.1)	33.5 (850.9)
Compact Probe	LC	24.5 (622.3)	16.5 (419.1)

Note: For these cFMus and ATEX/IECEx approval types add killark seal dimension to dimension A (6.2-inches; 157 mm).

241i Process Connection Variable Dimensions			
241i Connection Options	Ordering Code	Process Connection Width (X)	Process Connection Height (Y)
Compression Fitting 2-inch NPT	CM	2.8 (72.2)	2.7 (68.6)
Compression Fitting 2-inch 150 lb flange	CF	6.0 (152.4)	2.3 (58.4)
Compression Fitting 2-inch 300 lb flange	CG	6.5 (165.1)	2.4 (61.0)
Compression Fitting 2-inch 600 lb flange	CH	6.5 (165.1)	2.5 (63.5)
Packing Gland 2-inch NPT	PM	2.5 (63.5)	7.0 (177.8)
Packing Gland 2-inch 150 lb flange	PF	6.0 (152.4)	7.3 (185.4)
Packing Gland 2-inch 300 lb flange	PG	6.5 (165.1)	6.5 (165.1)
Packing Gland 2-inch 600 lb flange	PH	6.5 (165.1)	7.5 (190.5)

Note: Dimensions are measured from the center of the flow tube. For DN equivalent process connections use the same dimensions.

241i INSERTION DIMENSIONAL DRAWINGS

Note: Reference 241i Variable Probe Dimensions on page 13 to see length dimensions for A and B.

Overall Dimensions

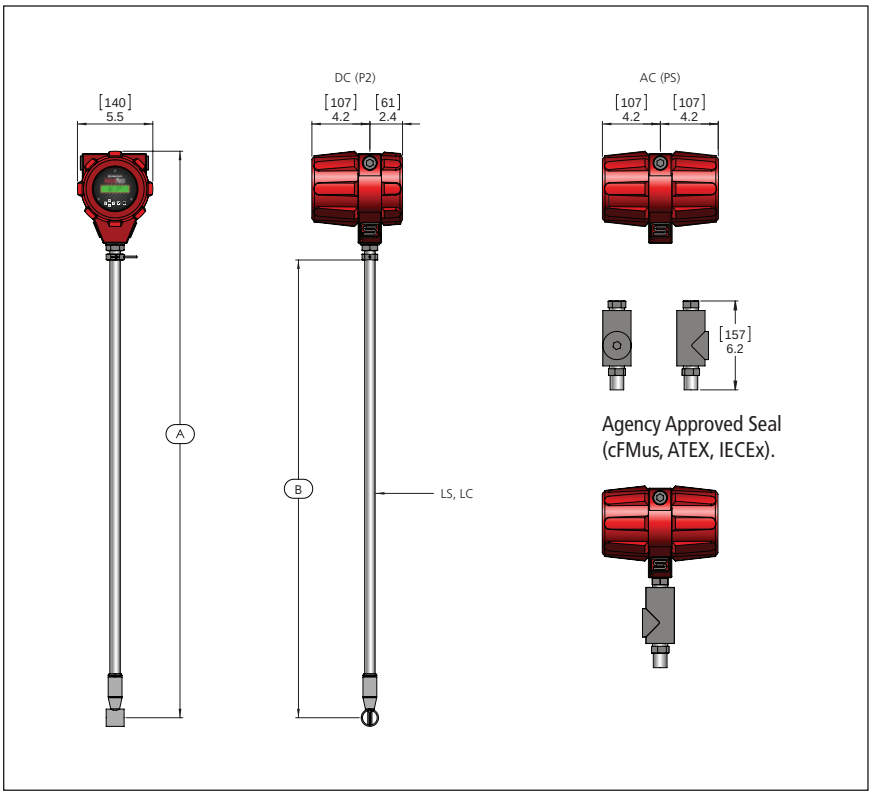

Flange and Compression Fittings

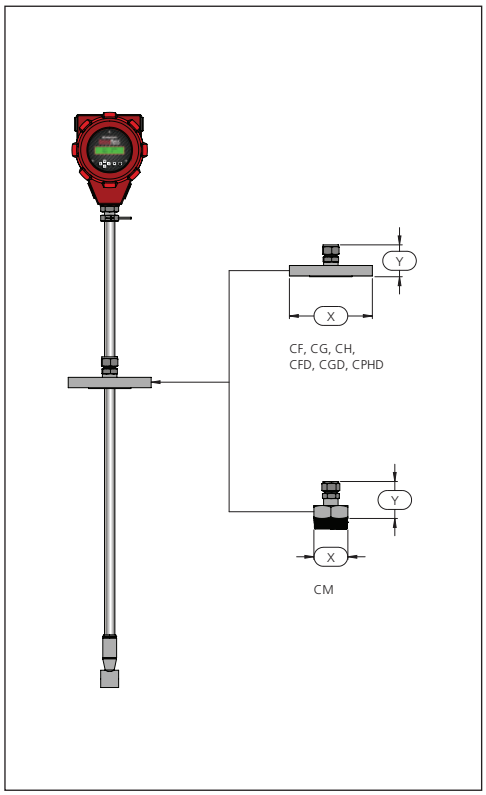

Note: Killark seal adds 6.2 inches (157 mm) to total meter length for agency approval devices.

Packing Glands

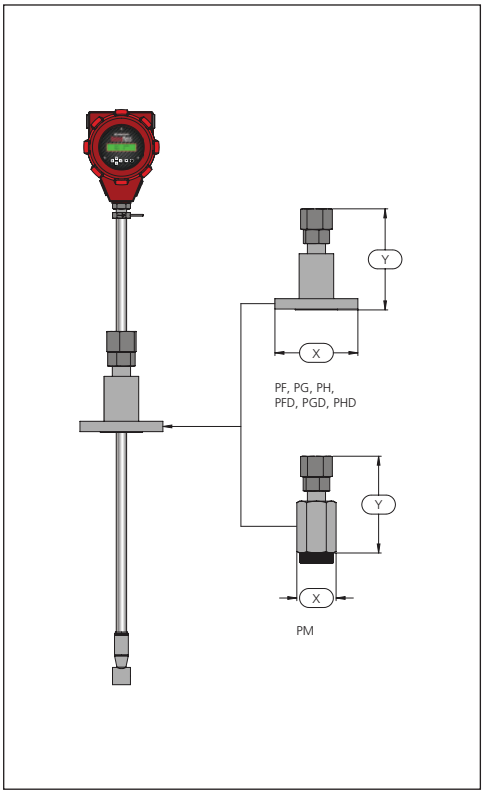

Adjustable, Rotatable & Removable Sensor Probe Retractor System

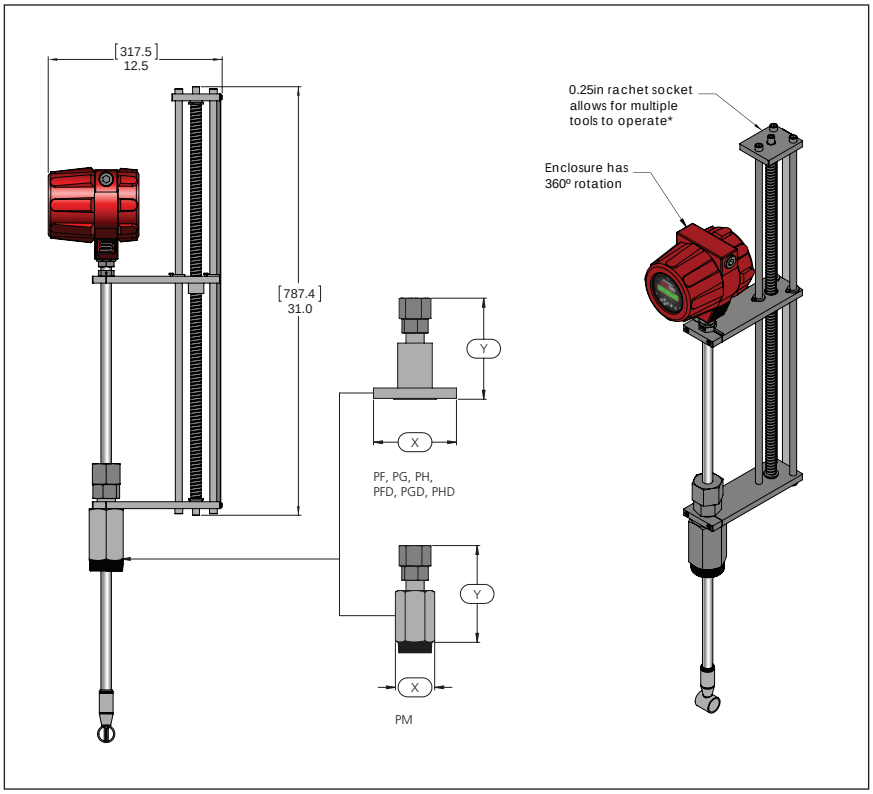

Note: All dimensions are inches (+/- .25-inch significant value). Millimeters are in parentheses. Certified drawings are available on request.

ADDITIONAL DIMENSIONAL DRAWINGS

Remote Electronics—Front (Inline and Insertion Versions)

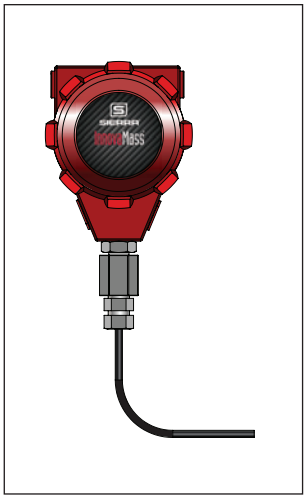

Remote Electronics—Side (Inline and Insertion Versions)

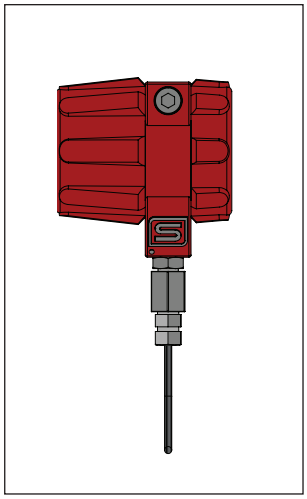

Remote Electronics with Bracket—Front (Inline and Insertion Versions)

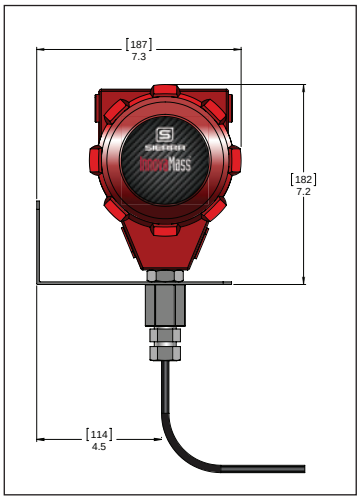

Remote Electronics with Bracket—Side (Inline and Insertion Versions)

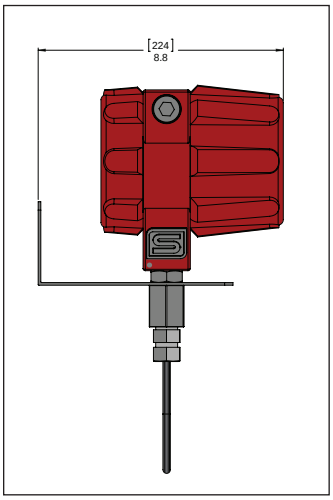

Bracket—Size and Mounting

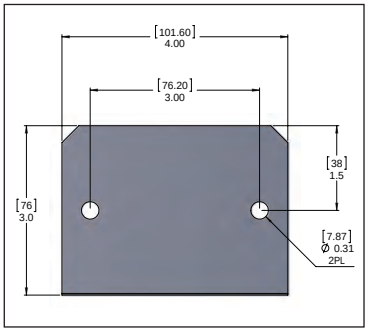

All dimensions are inches (+/- .25-inch significant value). Millimeters are in parentheses. Certified drawings are available on request.

Straight Pipe Length Requirements (in number of internal diameters, D)		
Upstream Plumbing	Upstream	Downstream
One 90° elbow before meter	10 D	5 D
Two 90° elbows before meter	15 D	5 D
Two 90° elbows before meter out of plane (If three 90° bends present, double recommend length)	25 D	10 D
Reduction before meter	10 D	5 D
Expansion before meter	20 D	5 D

240i Inline Meter Weight						
Connection Size	ANSI 150 lb		ANSI 300 lb		ANSI 600 lb	
	lb	kg	lb	kg	lb	kg
1-inch Flange	13.5	6.1	16.4	7.4	16.4	7.4
1.5-inch Flange	14.6	6.6	22.7	10.3	24.0	11.2
2-inch Flange	19.5	8.8	26.9	12.2	33.2	15.1
3-inch Flange	27.5	12.5	39.5	17.9	56.3	25.3
4-inch Flange	43.5	19.7	60.5	27.4	96.2	43.6
6-inch Flange	48.4	22.0	96.2	43.6	178	80.8
8-inch Flange	71.0	32.2	149	67.4	300	136

241i Insertion Meter Weight		
Connection Size	lb	kg
Compression Fitting, Male NPT	16.4	7.4
1.5-inch Flange	22.7	10.3
Compression Fitting, 150 lb Flange	26.9	12.2
Compression Fitting, 300 lb Flange	39.5	17.9
Packing Gland, Male NPT	60.5	27.4
Packing Gland, 150 lb Flange	10.4	4.7
Packing Gland, 300 lb Flange	24.8	11.3
Packing Gland, 600 lb Flange	26.8	12.2

ORDERING THE 240i INLINE

Parent	1	2	3	4	5	6	7	8	9	Options 1	Options 2
240i											

Instructions: To order a 240i, please fill in each number block by selecting the codes from the corresponding features below and following pages.

Parent Model Number	
240i	InnovaMass® iSeries Inline Vortex Flow Meter | Raptor II OS

Feature 1: Multivariable Options	
V	Volumetric flow meter for liquid, gas and steam
VT	Velocity and temperature sensors; mass measurement with temperature compensation
VTP	Velocity, temperature and pressure sensors; mass measurement with pressure and temperature compensation

Feature 2: Approvals	
1	NAA. Non-agency approved.
2	cFMus. Process Temperature Range: -40°C to 200°C (-40°F to 392°F); Class I, Division 1, Groups B,C, and D, T6; Ta = -40°C to 60°C (-40°F to 140°F). Type 4x.
3	ATEX and IECEx. Process Temperature Range: -40°C to 200°C (-40°F to 392°F). ATEX: II 2 G Ex db IIC T3 Gb Ta = -20°C to +60°C (-4°F to 140°F), IP66 II 2 D Ex tb IIIC T200°C Db Ta = -20°C to +60°C (-4°F to 140°F), IP66 IECEx : Ex db IIC T3 Gb Ta = -20°C to +60°C (-4°F to 140°F), IP66 Ex tb IIIC T200°C Db Ta = -20°C to +60°C (-4°F to 140°F), IP66

Feature 3: Flow Body (ANSI 316L)					
F4	1-inch ANSI class 150 lb flanged, 316L	**G4**	1-inch ANSI class 300 lb flanged, 316L	**H4**	1-inch ANSI class 600 lb flanged, 316L
F5	1.5-inch ANSI class 150 lb flanged, 316L	**G5**	1.5-inch ANSI class 300 lb flanged, 316L	**H5**	1.5-inch ANSI class 600 lb flanged, 316L
F6	2-inch ANSI class 150 lb flanged, 316L	**G6**	2-inch ANSI class 300 lb flanged, 316L	**H6**	2-inch ANSI class 600 lb flanged, 316L
F7	3-inch ANSI class 150 lb flanged, 316L	**G7**	3-inch ANSI class 300 lb flanged, 316L	**H7**	3-inch ANSI class 600 lb flanged, 316L
F8	4-inch ANSI class 150 lb flanged, 316L	**G8**	4-inch ANSI class 300 lb flanged, 316L	**H8**	4-inch ANSI class 600 lb flanged, 316L
F9	6-inch ANSI class 150 lb flanged, 316L	**G9**	6-inch ANSI class 300 lb flanged, 316L	**H9**	6-inch ANSI class 600 lb flanged, 316L
F10	8-inch ANSI class 150 lb flanged, 316L	**G10**	8-inch ANSI class 300 lb flanged, 316L	**H10**	8-inch ANSI class 600 lb flanged, 316L

Feature 3: Flow Body (DN 316L)					
FD4	DN25/PN16 flanged, 316L	**GD4**	DN25/PN40 flanged, 316L	**HD4**	DN25/PN64 flanged, 316L
FD5	DN40/PN16 flanged, 316L	**GD5**	DN40/PN40 flanged, 316L	**HD5**	DN40/PN64 flanged, 316L
FD6	DN50/PN16 flanged, 316L	**GD6**	DN50/PN40 flanged, 316L	**HD6**	DN50/PN64 flanged, 316L
FD7	DN80/PN16 flanged, 316L	**GD7**	DN80/PN40 flanged, 316L	**HD7**	DN80/PN64 flanged, 316L
FD8	DN100/PN16 flanged, 316L	**GD8**	DN100/PN40 flanged, 316L	**HD8**	DN100/PN64 flanged, 316L
FD9	DN150/PN16 flanged, 316L	**GD9**	DN150/PN40 flanged, 316L	**HD9**	DN150/PN64 flanged, 316L
FD10	DN200/PN16 flanged, 316L	**GD10**	DN200/PN40 flanged, 316L	**HD10**	DN200/PN64 flanged, 316L

ORDERING THE 240i INLINE (continued)

Feature 4: Electronics Enclosure	
E2	NEMA 4X IP 66 enclosure
E4( )	NEMA 4X IP 66 remote electronics on probe: specify cable length in parentheses, maximum 50 feet (15.24 m) includes cable glands

Feature 5: Display Option	
DD	Digital display with push buttons
NR	No readout/display

Feature 6: Input Power	
P2	24 VDC +/- 10% 0.4 amps, 12 watts maximum
PS	100-240 VAC, 50/60 Hz line power, 12 watts maximum

Feature 7: Output	
V6	Three analog outputs (4-20 mA), one alarm, one pulse
V6H	Three analog outputs (4-20 mA), one alarm, one pulse, HART
V6M	Three analog outputs (4-20 mA), one alarm, one pulse, Modbus
V6DP1	Three analog outputs (4-20 mA), one alarm, one pulse, Profibus DP with external M12 connection. Not available with AC power; Available only NAA
V6DP2	Three analog outputs (4-20 mA), one alarm, one pulse, Profibus DP with terminal block connection. Not available with AC power
V6FF	Three analog outputs (4-20 mA), one alarm, one pulse, Foundation Fieldbus with terminal block connections

Note: AC power (Feature 6) not available with V6DP1, V6DP2

Feature 8: Process Temperature	
ST	Standard process temperature -40°F to 392°F (-40°C to 200°C)

Feature 9: Process Pressure	
MP0	No pressure sensor; used with V and VT option
MP1	Maximum 30 psia (2.1 bara), proof 60 psia (4.1 bara)
MP2	Maximum 100 psia (6.9 bara), proof 200 psia (13.8 bara)
MP3	Maximum 300 psia (20.7 bara), proof 600 psia (41.4 bara)
MP4	Maximum 500 psia (34.5 bara), proof 1000 psia (69.0 bara)

Option 1: Certificates	
MC	Material certificates—US Mill certs on all wetted parts
PT	Pressure test certificate
CC	Certificate of conformance
NC	NACE certification

Option 2: Oxygen Cleaning	
O2C	Cleaned for O2 service (includes certification). Meter must include O2 cleaning, if meter is to be used for oxygen service.

Accessories: Manuals	
240i-IM	Additional Instruction Manual

ORDERING THE 241i INSERTION

											Accessories & Options		
241i	-	-	-	-	-	-	-	-	-	-	-	-	
Parent	1	2	3	4	5	6	7	8	9	10	A1	1	2

Instructions: To order a 241i, please fill in each number block by selecting the codes from the corresponding features below and following pages.

Parent Model Number	
241i	InnovaMass® iSeries Insertion Vortex Flow Meter | Raptor II OS | FloPro

Feature 1: Multivariable Options	
V	Volumetric flow meter for liquid, gas and steam
VT	Velocity and temperature sensors; mass measurement with temperature compensation
VTP	Velocity, temperature and pressure sensors; mass measurement with pressure and temperature compensation and automatic flow profile compensation by calculating the Reynolds Number

Feature 2: Approvals	
1	NAA. Non-agency approved.
2	cFMus. Process Temperature Range: -40°C to 200°C (-40°F to 392°F); Class I, Division 1, Groups B,C, and D, T6; Ta = -40°C to 60°C (-40°F to 140°F). Type 4x.
3	ATEX and IECEx. Process Temperature Range: -40°C to 200°C (-40°F to 392°F). ATEX: II 2 G Ex db IIC T3 Gb Ta = -20°C to +60°C (-4°F to 140°F), IP66 II 2 D Ex tb IIIC T200°C Db Ta = -20°C to +60°C (-4°F to 140°F), IP66 IECEx : Ex db IIC T3 Gb Ta = -20°C to +60°C (-4°F to 140°F), IP66 Ex tb IIIC T200°C Db Ta = -20°C to +60°C (-4°F to 140°F), IP66

Feature 3: Probe Length	
LS	Standard probe
LC	Compact probe available only for connections CM, CF, CG, CH
LE	Extended probe (consult factory if for PMR, PFR, PGR or PHR)

Feature 4: Electronics Enclosure	
E2	NEMA 4X IP 66 enclosure mounted on probe
E4( )	Remote electronics NEMA 4X IP 66; specify cable length in parentheses, maximum 50 feet (15.24 m)

Feature 5: Display Option	
DD	Digital display with push buttons
NR	No readout/display

Feature 6: Input Power	
P2	24 VDC +/- 10% 0.4 amps,12 watts maximum
PS	100-240 VAC, 50/60 Hz line power, 12 watts maximum

Feature 7: Output	
V6	Three analog outputs (4-20 mA), one alarm, one pulse
V6H	Three analog outputs (4-20 mA), one alarm, one pulse, HART
V6M	Three analog outputs (4-20 mA), one alarm, one pulse, Modbus
V6DP1	Three analog outputs (4-20 mA), one alarm, one pulse, Profibus DP with external M12 connection. Not available with AC power; Available only NAA
V6DP2	Three analog outputs (4-20 mA), one alarm, one pulse, Profibus DP with terminal block connection. Not available with AC power
V6FF	Three analog outputs (4-20 mA), one alarm, one pulse, Foundation Fieldbus with terminal block connections

Feature 8: Process Temperature	
ST	Standard process temperature -40°F to 392°F (-40°C to 200°C)

Feature 9: Process Pressure	
MP0	No pressure sensor: used with V and VT option
MP1	Maximum 30 psia (2.1 bara), proof 60 psia (4.1 bara)
MP2	Maximum 100 psia (6.9 bara), proof 200 psia (13.8 bara)
MP3	Maximum 300 psia (20.7 bara), proof 600 psia (41.4 bara)
MP4	Maximum 500 psia (34.5 bara), proof 1000 psia (69.0 bara)

Feature 10: Process Connection ANSI	
CO	No fitting (customer to supply)
CM	Compression fitting 2-inch Male NPT, 1500 psig (103 barg) pressure rating
CF	Compression fitting on 2-inch class 150 lb flange
CG	Compression fitting on 2-inch class 300 lb flange
CH	Compression fitting on 2-inch class 600 lb flange
PM	Packing gland*on 2-inch Male NPT, 50 psig (3.4 barg) maximum process pressure for live insertion/removal without a retractor. Packing gland itself rated to 500 psig process pressure. Packing gland live insertion/removal up to 500 psig (34.5 barg) must use a retractor.
PF	Packing gland on 2-inch class 150 lb flange
PG	Packing gland on 2-inch class 300 lb flange
PH	Packing gland on 2-inch class 600 lb flange

Feature 10: Process Connection DN	
CFD	Compression fitting on DN50/PN16 flange
CGD	Compression fitting on DN50/PN40 flange
CHD	Compression fitting on DN50/PN64 flange
PFD	Packing gland on DN50/PN16 flange
PGD	Packing gland on DN50/PN40 flange
PHD	Packing gland on DN50/PN64 flange

Note: Maximum pressure is dependent on temperature plus flange rating.

Accessories (A1): Retractor	
241-Retractor	Retractor (removable or fixed) for use with packing gland (consult factory); PM, PF, PG, PH, PFD, PGD, PHD. Use with iSeries only.

Option 1: Certification Documents	
MC	Material certificates—US Mill certs on all wetted parts
PT	Pressure test certificate
CC	Certificate of conformance
NC	NACE certification

Accessories: Manuals	
241i-IM	Additional Instruction Manual

SIERRA®

sierrainstruments.com

NORTH AMERICA

5 Harris Court, Building L / Monterey, CA 93940 / USA
800.866.0200 / 831.373.0200 / fax 831.373.4402

EUROPE

Bijlmansweid2 / 1934RE Egmond aan den Hoef / The Netherlands
+31 72 5071400 / fx +31 72 5071401

ASIA-PACIFIC

Second Floor Building 5 / Senpu Industrial Park
25 Hangdu Road Hangtou Town / Pu Dong New District
Shanghai, P.R. China Post Code 201316
+8621 5879 8521/22 / fx +8621 5879 8586

V2_2.16